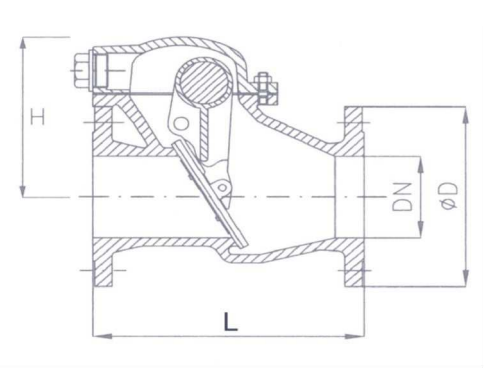

JV350007

Bronze Straight (Vertical) Storm Valve

DIN 87101 Form A

Flanged PN16

Other flange drillings on request

Storm valves also known as scupper valves, are basically swing check valves which can be supplied with or without a closing device.

They are used in sanitary discharge pipelines which have a ship-side exit, and prevent sea water entering the system during heavy sea.

Features, Benefits & Approvals

- DIN 87101 Form A
- Face to face to EN558 Series 48 (DIN 2501)
- Class society survey can be arranged
- 3.1 & 3.2 certificates available on request
- Optional open/shut indicators

Pressure & Temperature

Pressure rating:-
PN1

Temperature range:-
-10°C to 120°C

DN	50	65	80	100	125	150
L	200	240	260	300	350	400
H	137	148	175	195	216	242
D	165	185	200	220	250	285
Weight Kg	15	20	25	35	52	69

MATERIALS	
Body/Bonnet	Bronze (LG2)
Disc	Bronze (LG2)
Flap	NBR Faced

Do you require class approved valves? Contact sales for availability.

All data is designed as a guide and should not be regarded as wholly accurate in every detail
© G.J. Johnson & Sons Ltd
Datasheet No. 350007 - 11/20