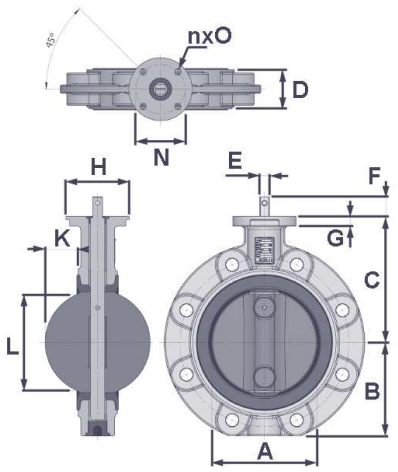

JV64E

Ductile Iron Body
EPDM Lined
Marine Quality
Butterfly Valve

Length to EN558-1 series 20

Lugged & Tapped Type

DN50-DN300

PN6/10/16, ANSI 150 & JIS 5/10K
(Specify when enquiring)

Marine quality butterfly valve with a bonded EPDM liner suitable for many duties including water.

The butterfly valve offers quick opening and closing with full flow in either direction and leak tight shut off.

Flange gaskets not needed since the lining that extends onto the faces acts as a gasket.

Approvals, Features & Benefits

- Lloyds, DNV, ABS & BV type approval
- Face to face acc. EN558-1 series 20
- 3.1 & 3.2 certification on request
- ISO 5211 top for direct mount actuation
- Supplied bare shaft as standard**

** Lever, gearbox, electric & pneumatic actuation available

Pressure & Temperature

Pressure range:-

50-200mm: 16 Bar
250-1200mm: 10 Bar

Temperature range:-

-30°C to 110°C

DN	40	50	65	80	100	125	150	200	250	300
A	40	52	68	82	104	127	151	201	252	304
B	61	67	74	82	100	112	134	159	195	220
C	113	118	126	133	147	160	180	204	245	270
D	33	43	46	46	52	56	56	60	68	78
E	11	11	11	11	11	14	14	17	22	22
F	25	25	25	25	25	28	28	28	30	30
G	12	12	12	14	14	14	14	14	15	15
H	90	90	90	90	90	90	90	90	125	125
K	3.5	4.7	11	18	26	35	47	70	91	113
L	23	30	49	68	90	114	140	192	243	293
N (ISO 5221)	F07	F07	F07	F07	F07	F07	F07	F07	F10	F10
nxO	4 x 9	4 x 9	4 x 9	4 x 9	4 x 9	4 x 9	4 x 9	4 x 9	4 x 11	4 x 11
Torque (Nm)*	13.75	18.75	26.25	43.75	60	106.25	218.75	275	375	487.5
Weight Kg	3.6	4.1	5.1	5.7	8.5	10.5	13.1	18.5	30.3	48

* 50-200mm Torque calculated at 16 bar wet duty, pressure includes 25% safety, add 25% for dry duty.

* 250-1200mm Torque calculated at 10 bar wet duty, pressure includes 25% safety, add 25% for dry duty.

MATERIALS (others available on request, contact sales for details)	
Body	Ductile Iron (GGG40)
Disc	Aluminium Bronze (AB2) or Stainless Steel (1.4408)
Liner	EPDM
Shaft	Stainless Steel

Do you require class approved valves? Contact sales for availability.

All data is designed as a guide and should not be regarded as wholly accurate in every detail
© G.J. Johnson & Sons Ltd
Datasheet N0. 100024a - 10/23

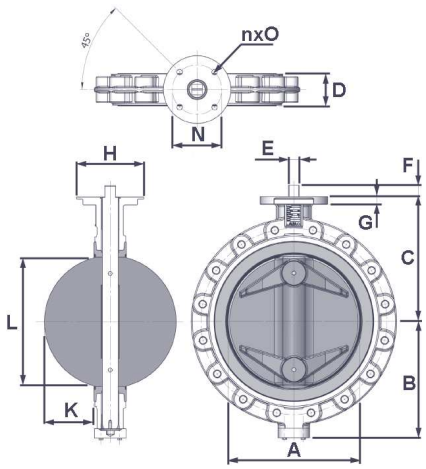

JV64E

Ductile Iron Body
EPDM Lined
Marine Quality
Butterfly Valve

Length to EN558-1 series 20

Lugged & Tapped Type

DN350-DN1200

PN6/10/16, ANSI 150 & JIS 5/10K
(Specify when enquiring)

Marine quality butterfly valve with a bonded EPDM liner suitable for many duties including water.

The butterfly valve offers quick opening and closing with full flow in either direction and leak tight shut off.

Flange gaskets not needed since the lining that extends onto the faces acts as a gasket.

Approvals, Features & Benefits

- Lloyds, DNV, ABS & BV type approval
- Face to face acc. EN558-1 series 20
- 3.1 & 3.2 certification on request
- ISO 5211 top for direct mount actuation
- Supplied bare shaft as standard**

** Lever, gearbox, electric & pneumatic actuation available

Pressure & Temperature

Pressure range:-

50-200mm: 16 Bar
250-1200mm: 10 Bar

Temperature range:-

-30°C to 110°C

DN	350	400	450	500	600	700	800	900	1000	1100	1200
A	336	397	447	497	601	689	790	889	986	1073	1174
B	282	307	352	387	452	489	549	614	664	756	824
C	315	350	375	415	465	555	620	675	740	800	875
D	78	102	114	127	154	165	190	203	216	254	254
E	27	27	36	36	46	70	80	90	90	Contact	Contact
F	29	29	38	38	48	110	120	120	120	Contact	Contact
G	20	20	20	20	25	25	30	30	30	40	40
H	150	150	175	175	210	210	300	300	300	350	350
K	129	147	167	185	223	262	300	343	385	410	460
L	327	383	432	481	581	669	767	865	962	1042	1146
N (ISO 5221)	F12	F12	F14	F14	F16	F16	F25	F25	F25	F30	F30
nxO	4 x 14	4 x 14	4 x 18	4 x 18	4 x 22	4 x 22	8 x 18	8 x 18	8 x 18	8 x 22	8 x 22
Torque (Nm)*	487.5	800	1062.5	1375	2256.25	4375	4900	6875	9618.75	14875	16875
Weight Kg	63	91	113	163	249	375	630	700	970	1221	1417

* 50-200mm Torque calculated at 16 bar wet duty, pressure includes 25% safety, add 25% for dry duty.

* 250-1200mm Torque calculated at 10 bar wet duty, pressure includes 25% safety, add 25% for dry duty.

MATERIALS (others available on request, contact sales for details)	
Body	Ductile Iron (GGG40)
Disc	Aluminium Bronze (AB2) or Stainless Steel (1.4408)
Liner	EPDM
Shaft	Stainless Steel

Do you require class approved valves? Contact sales for availability.

Lloyd's Register · BUREAU VERITAS · DNV·GL · AMERICAN BUREAU OF SHIPPING · ClassNK · RINA

All data is designed as a guide and should not be regarded as wholly accurate in every detail
© G.J. Johnson & Sons Ltd
Datasheet N0. 100024b - 10/23